DWG NO. B-91031-01

REVISION					
REV	DESCRIPTION	DATE	BY	CHK'D BY	ENGR APP'D
U	CHANGE TO NEW LOGO.	23-MAY-07	JB	ES	

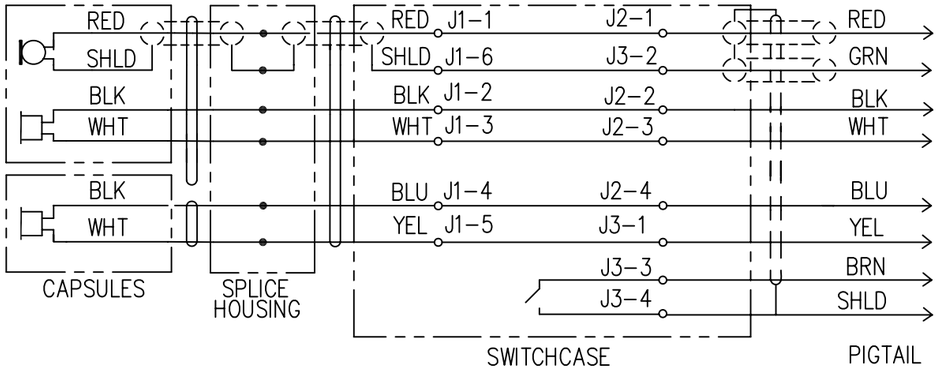

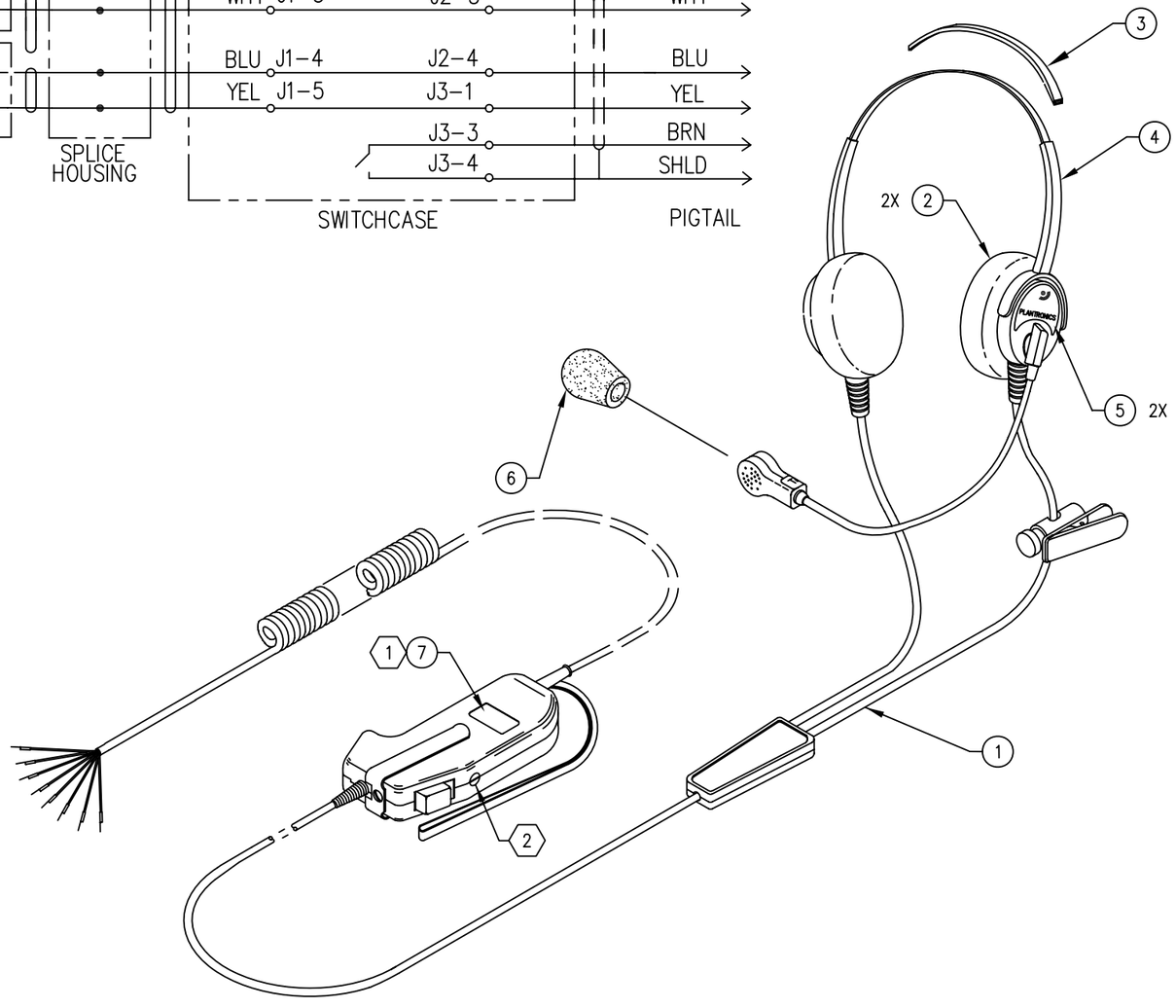

REFERENCE SPECIFICATIONS
- AT 1 kHz -

TRANSMITTER	
MICROPHONE TYPE	DYNAMIC.
POLAR PATTERN	CARDIOID.
OUTPUT AMPLITUDE	-74 + 4 dBV (126 TO 316 uV RMS) OPEN-CIRCUIT WITH AN INPUT SIGNAL OF 88 dB SPL APPLIED TO THE FRONT SURFACE OF THE MICROPHONE HOUSING WHICH IS HELD ON-AXIS AT ONE INCH FROM THE MOUTH OPENING OF AN ARTIFICIAL MOUTH.
OUTPUT IMPEDANCE	150 OHMS, NOMINAL.
RECEIVERS	
CONFIGURATION	DUAL-CHANNEL.
OUTPUT AMPLITUDE	84 ± 2.4 dB SPL INTO AN IEC COUPLER FOR SUPRA-AURAL EARPHONES PER ANSI STD S 3.7-1973 WITH A FORCE OF 36 OUNCES AND AN OPEN-CIRCUIT INPUT OF 40 mV THROUGH 600 OHMS.
INPUT IMPEDANCE	200 OHMS, NOMINAL, EACH RECEIVER.
PUSH-TO-TALK SWITCH	MOMENTARY OR LOCKING, SELECTABLE.
CABLES	
CAPSULE	39 INCHES.
CONNECTOR	15 FT (EXTENDED) COIL.
CONNECTOR	PIGTAILED.
COLOR	BLACK.
WARRANTY	ONE YEAR.

☑ SEE SEPARATE BILL OF MATERIALS

PLANTRONICS RESTRICTED

This document contains Plantronics, Inc. proprietary data, and is not to be copied, reproduced, used or divulged to unauthorized persons, in whole or in part, without proper authorization in writing from Plantronics. This information is the property of Plantronics, Inc. which reserves all rights to it.

(2) SET THE SELECTOR TO THE LOCKING POSITION.

(1) IMPRINT THE MODEL NUMBER AND DATE CODEON THE SWITCHCASE HOUSING PER DWG 13629.

NOTES: (UNLESS OTHERWISE SPECIFIED) REF 40459, 40460

THIRD ANGLE PROJECTION

UNLESS OTHERWISE SPECIFIED DIMENSIONS ARE IN: INCHES
AND TOLERANCES ARE:
DECIMAL
.XX = ± .01
.XXX = ± .005
ANGLE = ± 2° FRACTION = ± 1/16

MATERIAL:

FINISH:

DO NOT SCALE

DRAWN BY	J. BAKER	9/18/98
CHECKED BY	M. ERBE	9/18/89
DEV ENG APPD	T. MORGAN	9/18/89
MFG APPD		
PROD ENG APPD		

PLANTRONICS SOUND INNOVATION

TITLE
MODEL
SDS 1031-01

SIZE	CAT CODE	DWG NO.	REV.
B	01	91031-01	U

SCALE 1=3 SHEET 1 OF 1

Special Products Packed-Level Bill of Materials

Model Number: SDS 1031-01
Part Number: 91031-01
Revision: U
Date: 23-May-07
Receiver Configuration: Dual-channel
Connector: Pigtailed
Capsule Type: Supra Dynamic
Configuration: Switchcase

View Drawing (only available when viewing BOM online in Word format)

ITEM	QTY	PLANTRONICS PART NUMBER	DESCRIPTION
1.	1	100559-01	HEADSET ASSEMBLY
2.	2	25073-01	EAR CUSHION
3.	1	17876-02	HEADBAND TENSIONER KIT
4.	1	26938-01	HEADBAND ASSEMBLY
5.	2	19954-03	LABEL, CAPSULE
6.	1	24000-01	WINDSCREEN
7.	1	24578-01	LABEL, HEADSET
8.	1	25652-01	BOX, PACKING
9.	1	25729-02	KIT, SUPRA NO.2
10.	1	25686-02	SLEEVE, FOAM
11.	1	40637-01	POUCH
12.	REF	40460-00	PERFORMANCE SPECIFICATION

DWG NO. B-91031-03

REVISION					
REV	DESCRIPTION	DATE	BY	CHK'D BY	ENGR APP'D
L	CHANGE TO NEW LOGO.	22-MAY-07	JB	ES	

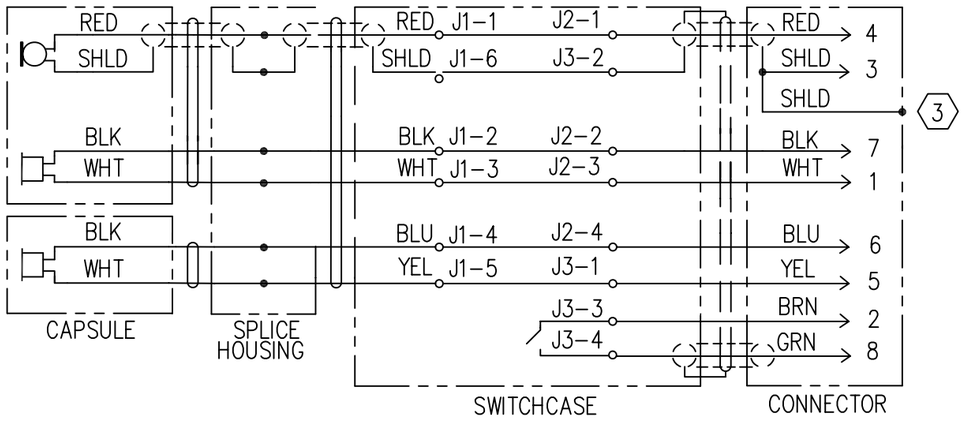

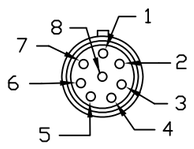

PLUG

CONTACT SIDE

DETAIL A
SCALE: 2=1

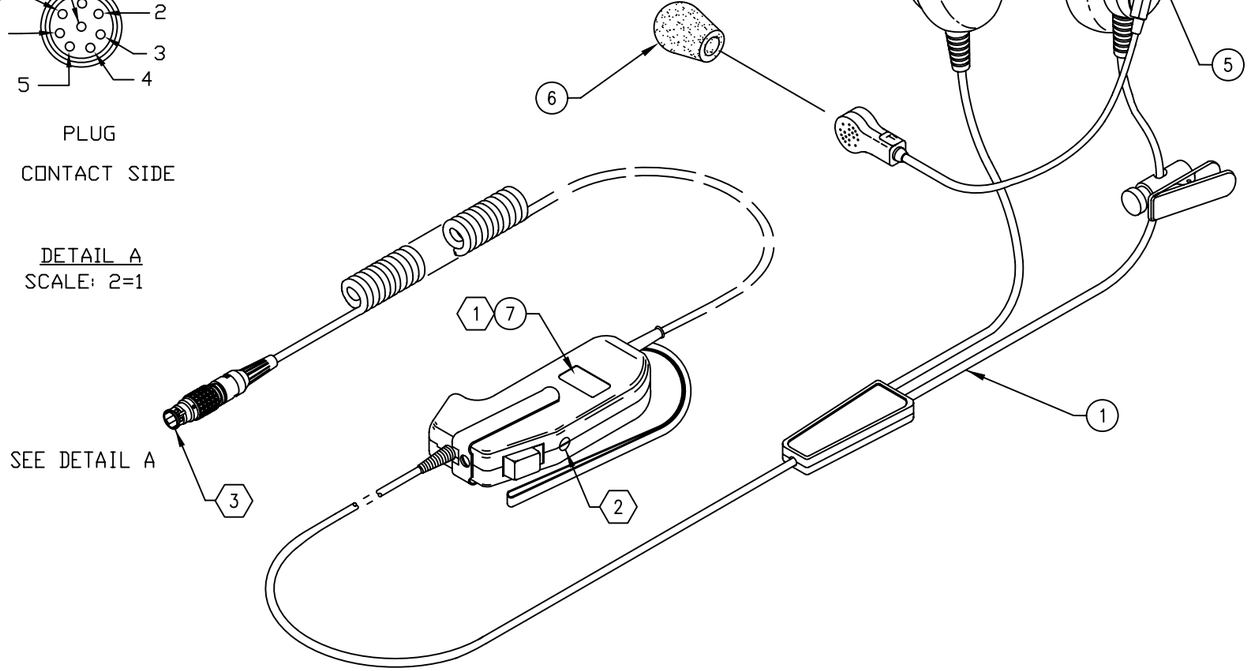

3 TERMINATE THE SHIELD TO CONNECTOR PIN 3 AND THE CONNECTOR SHELL.

2 SET THE SELECTOR TO THE LOCKING POSITION.

(1) IMPRINT THE MODEL NUMBER AND DATE CODE ON THE LABEL (ITEM 7) PER DWG 13629.

NOTES: (UNLESS OTHERWISE SPECIFIED) REF 40459, 40460

REFERENCE SPECIFICATIONS
- AT 1 kHz -

TRANSMITTER	
MICROPHONE TYPE	DYNAMIC.
POLAR PATTERN	CARDIOID.
OUTPUT AMPLITUDE	-74 ± 4 dBV (126 TO 316 uV RMS) OPEN-CIRCUIT WITH AN INPUT SIGNAL OF 88 dB SPL APPLIED TO THE FRONT SURFACE OF THE MICROPHONE HOUSING WHICH IS HELD ON-AXIS AT ONE INCH FROM THE MOUTH OPENING OF AN ARTIFICIAL MOUTH.
OUTPUT IMPEDANCE	150 OHMS, NOMINAL.
RECEIVERS	
CONFIGURATION	DUAL-CHANNEL.
OUTPUT AMPLITUDE	84 ± 4 dB SPL INTO AN IEC COUPLER FOR SUPRA-AURAL EARPHONES PER ANSI STD S 3.7-1973 WITH A FORCE OF 36 OUNCES AND AN OPEN-CIRCUIT INPUT OF 40 mV THROUGH 600 OHMS.
INPUT IMPEDANCE	200 OHMS, NOMINAL, EACH RECEIVER.
PUSH-TO-TALK SWITCH	MOMENTARY OR LOCKING, SELECTABLE.
CABLES	
CAPSULE	39 INCHES.
CONNECTOR	15 FT (EXTENDED) COIL.
CONNECTOR	LEMO FGG.1K.308.CLAC55Z WITH BOOT GMA.1B.054.DN.
COLOR	BLACK.
WARRANTY	ONE YEAR.

☑ SEE SEPARATE BILL OF MATERIALS

PLANTRONICS RESTRICTED

This document contains Plantronics, Inc. proprietary data, and is not to be copied, reproduced, used or divulged to unauthorized persons, in whole or in part, without proper authorization in writing from Plantronics. This information is the property of Plantronics, Inc. which reserves all rights to it.

THIRD ANGLE PROJECTION

UNLESS OTHERWISE SPECIFIED DIMENSIONS ARE IN: INCHES
AND TOLERANCES ARE:
DECIMAL
.XX = ± .01
.XXX = ± .005
ANGLE = ± 2° FRACTION = ± 1/16

MATERIAL:

FINISH:

DO NOT SCALE

DRAWN BY	J. BAKER	9/6/96
CHECKED BY	A. FRISCIA	9/6/96
DEV ENG APPD	JAN SHADLE	9/6/96
MFG APPD		
PROD ENG APPD		

PLANTRONICS SOUND INNOVATION

TITLE
MODEL
SDS 1031-03

SIZE	CAT CODE	DWG NO.	REV.
B	01	91031-03	L

SCALE 1=1 SHEET 1 OF 1

Special Products Packed-Level Bill of Materials

Model Number: SDS 1031-03
Part Number: 91031-03
Revision: L
Date: 22-May-07
Receiver Configuration: Dual-channel
Connector: Lemo FGG. 1K.308.CLAC.55Z with Boot GMA.1B.054.DN
Capsule Type: Supra Dynamic
Configuration: Switchcase

View Drawing (only available when viewing BOM online in Word format)

ITEM	QTY	PLANTRONICS PART NUMBER	DESCRIPTION
1.	1	100392-01	HEADSET ASSEMBLY
2.	2	25073-01	EAR CUSHION
3.	1	17876-02	HEADBAND TENSIONER KIT
4.	1	26983-01	HEADBAND
5.	2	19954-03	LABEL, CAPSULE
6.	1	24000-01	WINDSCREEN
7.	1	25478-01	LABEL, MODEL NO. & DATE CODE
8.	1	25652-01	BOX, PACKING
9.	1	25729-02	KIT, SUPRA NO. 2
10.	1	25686-02	SLEEVE, FOAM
11.	1	40637-01	POUCH
12.	REF	40460-00	PERFORMANCE SPECIFICATION

DWG NO. B-91031-04

REVISION					
REV	DESCRIPTION	DATE	BY	CHK'D BY	ENGR APP'D
J	CHANGE TO NEW LOGO. DELETE W1.	21-MAY-07	JB	ES	

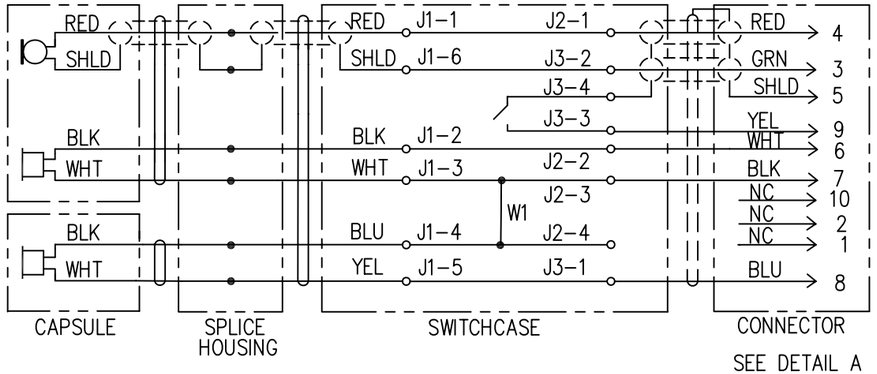

SEE DETAIL A

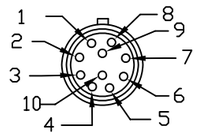

PLUG

WIRING SIDE
(SOLDER SIDE)

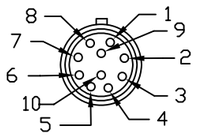

PLUG

CONTACT SIDE

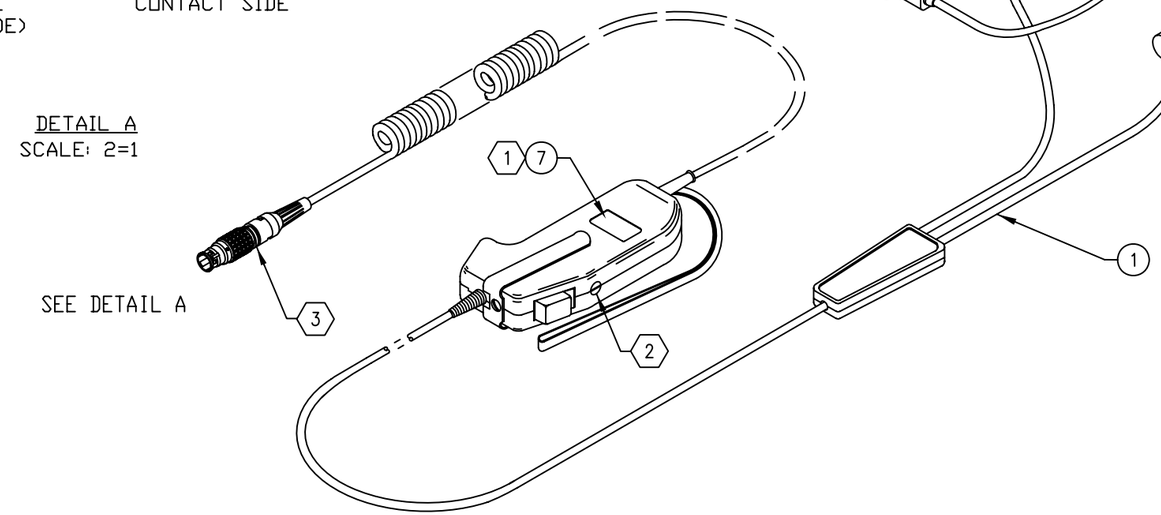

REFERENCE SPECIFICATIONS
- AT 1 kHz -

TRANSMITTER	
MICROPHONE TYPE	CARDIOID.
MICROPHONE TYPE	CARDIOID.
OUTPUT AMPLITUDE	-74 ± 4 dBV (126 TO 316 uV RMS) OPEN-CIRCUIT WITH AN INPUT SIGNAL OF 88 dB SPL APPLIED TO THE FRONT SURFACE OF THE MICROPHONE HOUSING WHICH IS HELD ON-AXIS AT ONE INCH FROM THE MOUTH OPENING OF AN ARTIFICIAL MOUTH.
OUTPUT IMPEDANCE	150 OHMS, NOMINAL.
RECEIVERS	
CONFIGURATION	DUAL-CHANNEL.
OUTPUT AMPLITUDE	84 ± 4 dB SPL INTO AN IEC COUPLER FOR SUPRA-AURAL EARPHONES PER ANSI STD S 3.7-1973 WITH A FORCE OF 36 OUNCES AND AN OPEN-CIRCUIT INPUT OF 40 mV THROUGH 600 OHMS.
INPUT IMPEDANCE	200 OHMS, NOMINAL, EACH RECEIVER.
PUSH-TO-TALK SWITCH	MOMENTARY OR LOCKING, SELECTABLE.
CABLES	
CAPSULE	39 INCHES.
CONNECTOR	15 FT (EXTENDED) COIL.
CONNECTOR	LEMO FGG.2B.310.CLAD.62Z WITH BOOT GMA.2B.050.DN.
COLOR	BLACK.
WARRANTY	ONE YEAR.

☑ SEE SEPARATE BILL OF MATERIALS

(3) ALL 10 CONTACTS ARE INSTALLED.

(2) SET THE SELECTOR TO THE LOCKING POSITION.

(1) IMPRINT THE MODEL NUMBER AND DATE CODE ON THE SWITCHCASE HOUSING PER DWG 13629.

NOTES: (UNLESS OTHERWISE SPECIFIED) REF 40459, 40460

THIRD ANGLE PROJECTION

PLANTRONICS RESTRICTED

This document contains Plantronics, Inc. proprietary data, and is not to be copied, reproduced, used or divulged to unauthorized persons, in whole or in part, without proper authorization in writing from Plantronics. This information is the property of Plantronics, Inc. which reserves all rights to it.

UNLESS OTHERWISE SPECIFIED DIMENSIONS ARE IN: INCHES
AND TOLERANCES ARE:
DECIMAL
.XX = ± .01
.XXX = ± .005
ANGLE = ± 2° FRACTION = ± 1/16

MATERIAL:

FINISH:

DO NOT SCALE

DRAWN BY	J. BAKER	5/12/97
CHECKED BY	M. ERBE	5/12/97
DEV ENG APPD	JAN SHADLE	5/14/97
MFG APPD		
PROD ENG APPD		

PLANTRONICS
SOUND INNOVATION

TITLE
MODEL

SDS 1031-04

SIZE	CAT CODE	DWG NO.	REV.
B	01	91031-04	J

SCALE 1=1 SHEET 1 OF 1

Special Products Packed-Level Bill of Materials

Model Number: SDS 1031-04
Part Number: 91031-04
Revision: J
Date: 21-May-07
Receiver Configuration: Dual-channel
Connector: Lemo FGG.2B.310.CLAD.62Z with Boot GMA. 2B.050.DN
Capsule Type: Supra Dynamic
Configuration: Switchcase

View Drawing (only available when viewing BOM online in Word format)

ITEM	QTY	PLANTRONICS PART NUMBER	DESCRIPTION
1.	1	100166-01	HEADSET ASSEMBLY
2.	2	25073-01	EAR CUSHION
3.	1	17876-02	HEADBAND TENSIONER KIT
4.	1	26938-01	HEADBAND ASSEMBLY
5.	2	19954-03	LABEL, CAPSULE
6.	1	24000-01	WINDSCREEN
7.	1	25478-01	LABEL, MODEL NO. & DATE CODE
8.	1	25652-01	BOX, PACKING
9.	1	25729-02	KIT, SUPRA NO. 2
10.	1	25686-02	SLEEVE, FOAM
11.	1	40637-01	POUCH
12.	REF	40450-00	PERFORMANCE SPECIFICATION

DWG NO. B-91031-05

REVISION					
REV	DESCRIPTION	DATE	BY	CHK'D BY	ENGR APP'D
J	CHANGE TO NEW LOGO.	18-MAY-07	JB	ES	

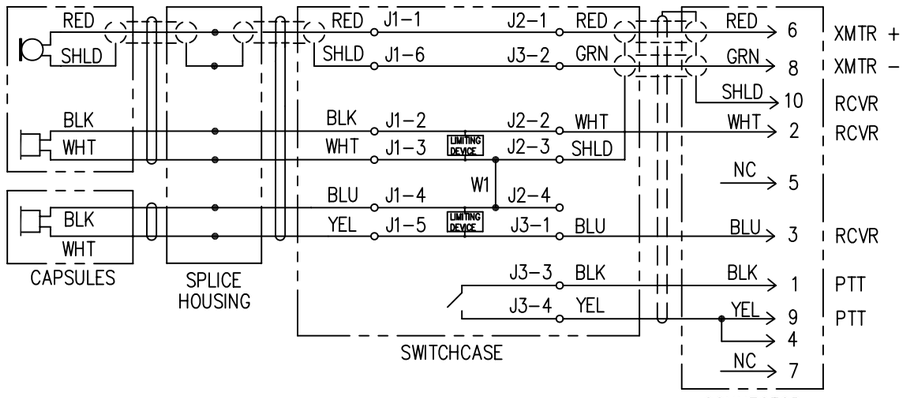

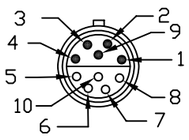

PLUG

WIRING SIDE
(SOLDER SIDE)

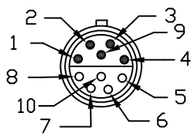

PLUG

CONTACT SIDE

DETAIL A
SCALE: 2=1

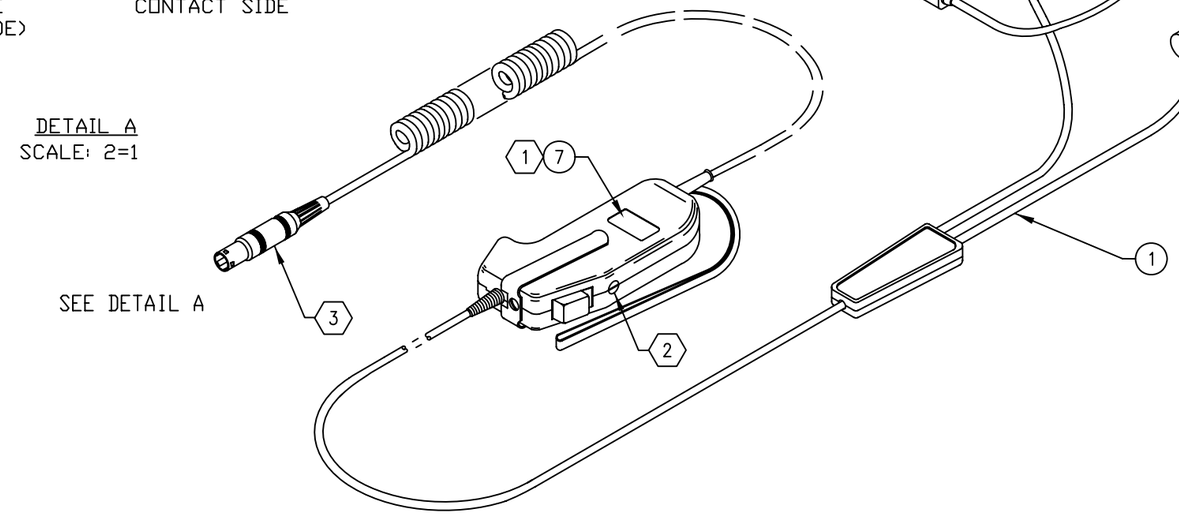

REFERENCE SPECIFICATIONS
- AT 1 kHz -

TRANSMITTER	
MICROPHONE TYPE	CARDIOID.
MICROPHONE TYPE	CARDIOID.
OUTPUT AMPLITUDE	-74 ± 4 dBV (126 TO 316 uV RMS) OPEN-CIRCUIT WITH AN INPUT SIGNAL OF 88 dB SPL APPLIED TO THE FRONT SURFACE OF THE MICROPHONE HOUSING WHICH IS HELD ON-AXIS AT ONE INCH FROM THE MOUTH OPENING OF AN ARTIFICIAL MOUTH.
OUTPUT IMPEDANCE	150 OHMS, NOMINAL.
RECEIVERS	
CONFIGURATION	DUAL-CHANNEL.
OUTPUT AMPLITUDE	84 ± 4 dB SPL INTO AN IEC COUPLER FOR SUPRA-AURAL EARPHONES PER ANSI STD S 3.7-1973 WITH A FORCE OF 36 OUNCES AND AN OPEN-CIRCUIT INPUT OF 40 mV THROUGH 600 OHMS.
INPUT IMPEDANCE	200 OHMS, NOMINAL, EACH RECEIVER.
PUSH-TO-TALK SWITCH	MOMENTARY OR LOCKING, SELECTABLE.
CABLES	
CAPSULE	39 INCHES.
CONNECTOR	15 FT (EXTENDED) COIL.
CONNECTOR	LEMO FFP.2S.310.CLAC.62Z WITH BOOT GMA.2B.050.DN.
COLOR	BLACK.
WARRANTY	ONE YEAR.

☑ SEE SEPARATE BILL OF MATERIALS

(3) ALL 10 CONTACTS ARE INSTALLED.

(2) SET THE SELECTOR TO THE LOCKING POSITION.

(1) IMPRINT THE MODEL NUMBER AND DATE CODE ON THE SWITCHCASE HOUSING PER DWG 13629.

NOTES: (UNLESS OTHERWISE SPECIFIED) REF 40459, 40460

THIRD ANGLE PROJECTION

PLANTRONICS RESTRICTED
This document contains Plantronics, Inc. proprietary data, and is not to be copied, reproduced, used or divulged to unauthorized persons, in whole or in part, without proper authorization in writing from Plantronics. This information is the property of Plantronics, Inc. which reserves all rights to it.

UNLESS OTHERWISE SPECIFIED DIMENSIONS ARE IN: INCHES
AND TOLERANCES ARE:
DECIMAL
.XX = ± .01
.XXX = ± .005
ANGLE = ± 2° FRACTION = ± 1/16

MATERIAL:

FINISH:

DO NOT SCALE

DRAWN BY	J. BAKER	1/26/98
CHECKED BY	M. ERBE	1/26/98
DEV ENG APPD	JAN SHADLE	1/27/98
MFG APPD		
PROD ENG APPD		

PLANTRONICS
SOUND INNOVATION

TITLE
MODEL
SDS 1031-05

SIZE	CAT CODE	DWG NO.	REV.
B	01	91031-05	J

SCALE 1=1 SHEET 1 OF 1

Special Products Packed-Level Bill of Materials

Model Number: SDS 1031-05
Part Number: 91031-05
Revision: J
Date: 18-May-07
Receiver Configuration: Dual-channel
Connector: Lemo FFP.2S.310.CLAC.62Z with Boot GMA. 2B.050.DN
Capsule Type: Supra Dynamic
Configuration: Switchcase

View Drawing (only available when viewing BOM online in Word format)

ITEM	QTY	PLANTRONICS PART NUMBER	DESCRIPTION
1.	1	100069-01	HEADSET ASSEMBLY
2.	2	25073-01	EAR CUSHION
3.	1	17876-02	HEADBAND TENSIONER KIT
4.	1	26938-01	HEADBAND ASSEMBLY
5.	2	19954-03	LABEL, CAPSULE
6.	1	24000-01	WINDSCREEN
7.	1	25478-01	LABEL, MODEL NO. & DATE CODE
8.	1	25652-01	BOX, PACKING
9.	1	25729-02	KIT, SUPRA NO. 2
10.	1	25686-02	SLEEVE, FOAM
11.	1	40637-01	POUCH
12.	REF	40460-00	PERFORMANCE SPECIFICATION

DWG NO. B-91031-06

REVISION					
REV	DESCRIPTION	DATE	BY	CHK'D BY	ENGR APP'D
H	CHANGE TO NEW LOGO. DELETE W1.	16-MAY-07	JB		

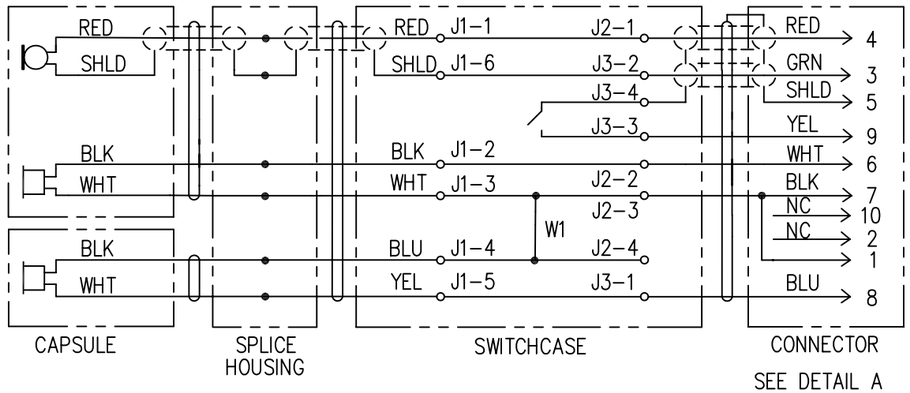

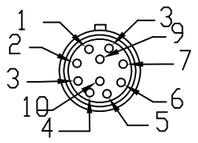

PLUG
WIRING SIDE
(SOLDER SIDE)

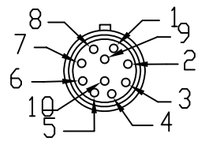

PLUG
CONTACT SIDE

DETAIL A
SCALE: 2=1

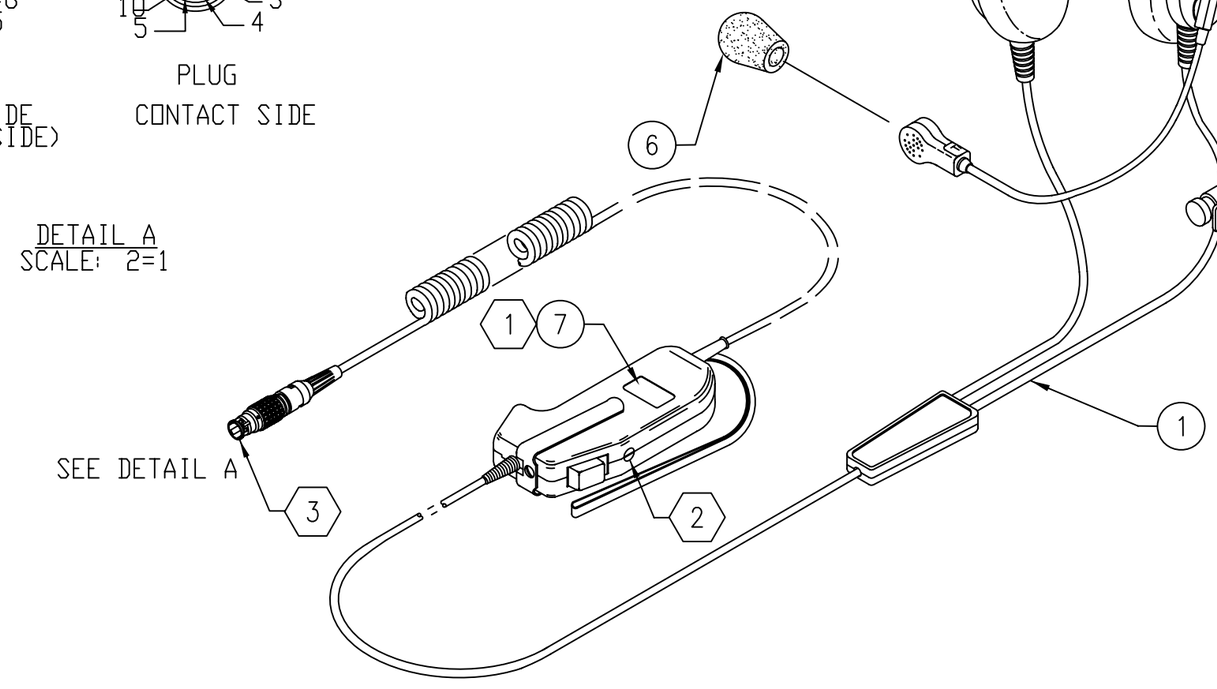

REFERENCE SPECIFICATIONS
- AT 1 kHz -

TRANSMITTER	
MICROPHONE TYPE	DYNAMIC
POLAR PATTERN	CARDIOID.
OUTPUT AMPLITUDE	-74 ± 4 dBV (126 TO 316 uV RMS) OPEN-CIRCUIT WITH AN INPUT SIGNAL OF 88 dB SPL APPLIED TO THE FRONT SURFACE OF THE MICROPHONE HOUSING WHICH IS HELD ON-AXIS AT ONE INCH FROM THE MOUTH OPENING OF TAN ARTIFICIAL MOUTH.
OUTPUT IMPEDANCE	150 OHMS, NOMINAL.
RECEIVERS	
CONFIGURATION	DUAL-CHANNEL.
OUTPUT AMPLITUDE	84 ± 4 dB SPL INTO AN IEC COUPLER FOR SUPRA-AURAL EARPHONES PER ANSI STD S 3.7-1973 WITH A FORCE OF 36 OUNCES AND AN OPEN-CIRCUIT INPUT OF 40 mV THROUGH 600 OHMS.
INPUT IMPEDANCE	200 OHMS, NOMINAL, EACH RECEIVER.
PUSH-TO-TALK SWITCH	MOMENTARY OR LOCKING, SELECTABLE.
CABLES	
CAPSULE	39 INCHES.
CONNECTOR	15 FT (EXTENDED) COIL.
CONNECTOR	LEMO FGG.2B.310.CLAD.62Z WITH BOOT GMA.2B.050.DN.
COLOR	BLACK.
WARRANTY	ONE YEAR.

☑ SEE SEPARATE BILL OF MATERIALS

PLANTRONICS RESTRICTED

This document contains Plantronics, Inc. proprietary data, and is not to be copied, reproduced, used or divulged to unauthorized persons, in whole or in part, without proper authorization in writing from Plantronics. This information is the property of Plantronics, Inc. which reserves all rights to it.

3. ALL 10 CONTACTS ARE INSTALLED.
2. SET THE SELECTOR TO THE LOCKING POSITION.
1. IMPRINT THE MODEL NUMBER AND DATE CODE ON THE SWITCHCASE HOUSING PER DWG 13629.

NOTES: (UNLESS OTHERWISE SPECIFIED) REF 40459, 40460

THIRD ANGLE PROJECTION

UNLESS OTHERWISE SPECIFIED DIMENSIONS ARE IN: INCHES
AND TOLERANCES ARE:
DECIMAL
.XX = ± .01
.XXX = ± .005
ANGLE = ± 2° FRACTION = ± 1/16

MATERIAL:

FINISH:

DO NOT SCALE

DRAWN BY	J. BAKER	8/11/98
CHECKED BY	M. ERBE	8/11/98
DEV ENG APPD	RMS	8/11/98
MFG APPD		
PROD ENG APPD		

PLANTRONICS SOUND INNOVATION

TITLE
MODEL
SDS 1031-06

SIZE	CAT CODE	DWG NO.	REV.
B	01	91031-06	H

SCALE 1=3 SHEET 1 OF 1

Special Products Packed-Level Bill of Materials

Model Number: SDS 1031-06
Part Number: 91031-06
Revision: H
Date: 16-May-07
Receiver Configuration: Dual-channel
Connector: Lemo FGG.2B.310.CLAD.62Z with Boot GMA.2B.050.DN
Capsule Type: Supra Dynamic
Configuration: Switchcase

View Drawing (only available when viewing BOM online in Word format)

ITEM	QTY	PLANTRONICS PART NUMBER	DESCRIPTION
1.	1	100285-01	HEADSET ASSEMBLY
2.	2	25073-01	EAR CUSHION
3.	1	17876-02	HEADBAND TENSIONER KIT
4.	1	26938-01	HEADBAND ASSEMBLY
5.	2	19954-03	LABEL, CAPSULE
6.	1	24000-01	WIND SCREEN
7.	1	25478-01	LABEL, MODEL NO. & DATE CODE
8.	1	25652-01	BOX, PACKING
9.	1	25729-02	KIT, SUPRA NO. 2
10.	1	25686-02	SLEEVE, FOAM
11.	1	40637-01	POUCH
12.	REF	40460-00	PERFORMANCE SPECIFICATION

DWG NO. B-91031-07

REVISION					
REV	DESCRIPTION	DATE	BY	CHK'D BY	ENGR APP'D
F	CHANGE TO NEW LOGO. DELETE W1.	25-APR-07	JB	RC	

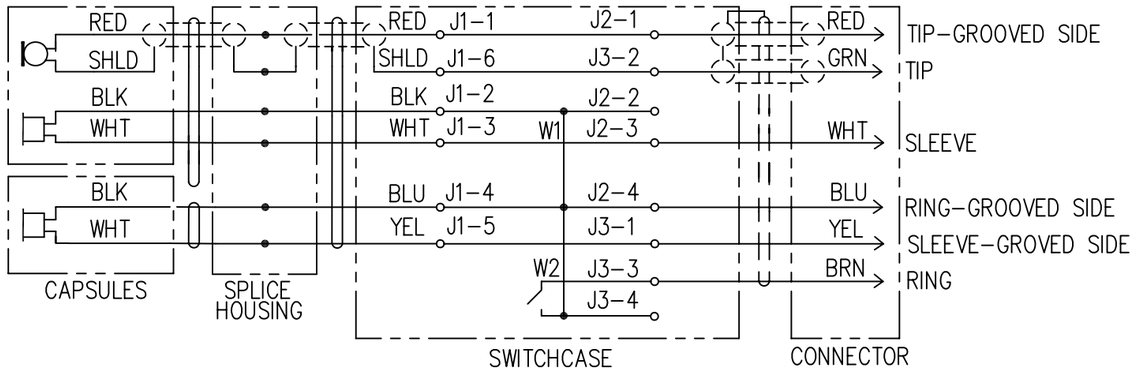

SEE DETAIL A

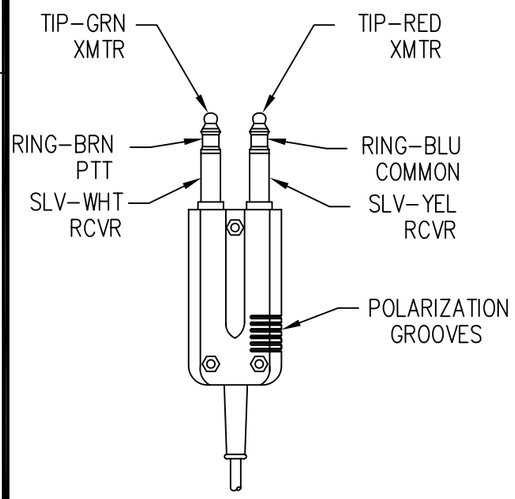

DETAIL A
SCALE: 1=2

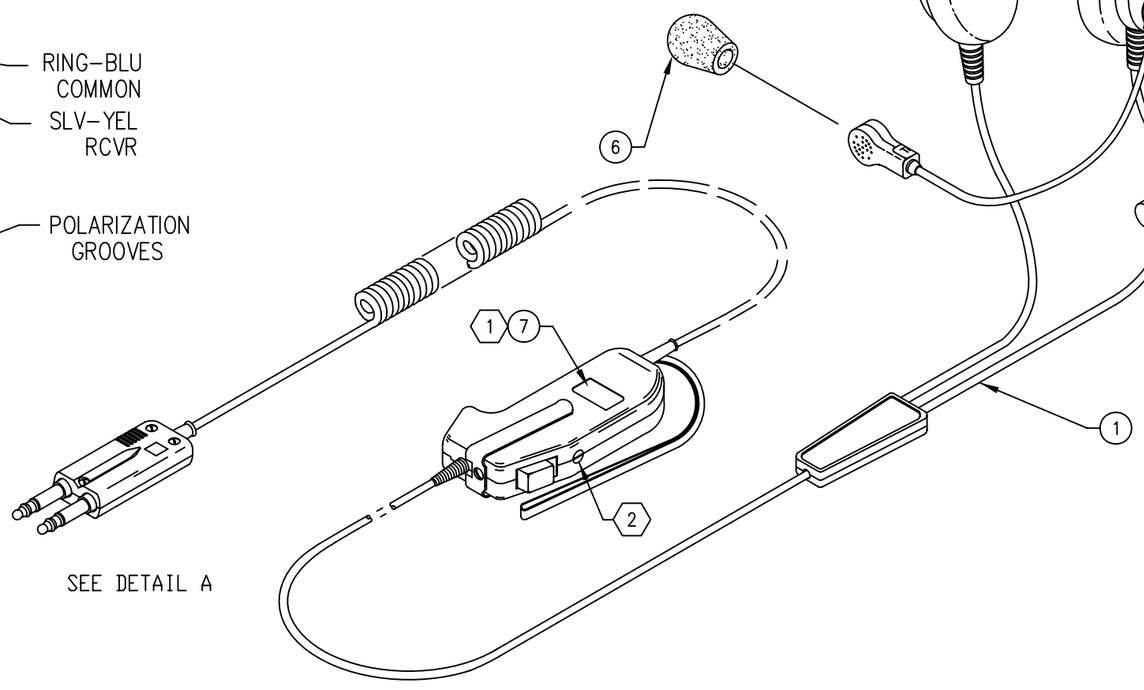

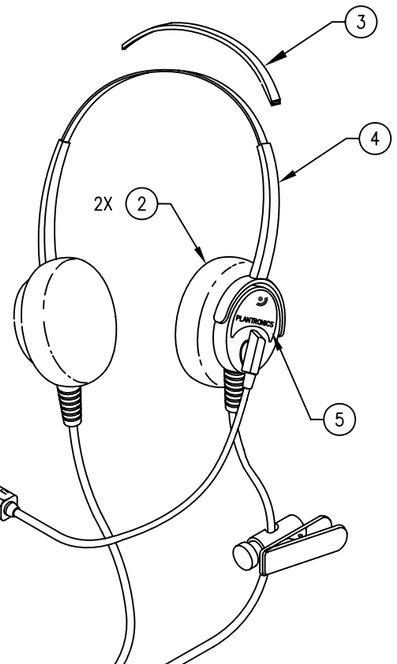

REFERENCE SPECIFICATIONS
- AT 1 kHz -

TRANSMITTER	
MICROPHONE TYPE	DYNAMIC.
POLAR PATTERN	CARDIOID.
OUTPUT AMPLITUDE	-74 ± 4 dBV (126 TO 316 uV RMS) OPEN-CIRCUIT WITH AN INPUT SIGNAL OF 88 dB SPL APPLIED TO THE FRONT SURFACE OF THE MICROPHONE HOUSING WHICH IS HELD ON-AXIS AT ONE INCH FROM THE MOUTH OPENING OF AN ARTIFICIAL MOUTH.
OUTPUT IMPEDANCE	150 OHMS, NOMINAL.
RECEIVERS	
CONFIGURATION	DUAL-CHANNEL.
OUTPUT AMPLITUDE	84 ± 4 dB SPL INTO AN IEC COUPLER FOR SUPRA-AURAL EARPHONES PER ANSI STD S 3.7-1973 WITH A FORCE OF 36 OUNCES AND AN OPEN-CIRCUIT INPUT OF 40 mV THROUGH 600 OHMS.
INPUT IMPEDANCE	200 OHMS, NOMINAL, EACH RECEIVER.
PUSH-TO-TALK SWITCH	MOMENTARY OR LOCKING, SELECTABLE.
CABLES	
CAPSULE	39 INCHES.
CONNECTOR	15 FT (EXTENDED) COIL.
CONNECTOR	PJ-7 OR EQUIVALENT.
COLOR	BLACK.
WARRANTY	ONE YEAR.

☑ SEE SEPARATE BILL OF MATERIALS

(2) SET THE SELECTOR TO THE LOCKING POSITION.

(1) IMPRINT THE MODEL NUMBER AND DATE CODE ON THE LABEL (ITEM 7) AND INSTALL ON SWITCHCASE HOUSING, PER DWG 13629.

NOTES: (UNLESS OTHERWISE SPECIFIED) REF 40459, 40460

THIRD ANGLE PROJECTION

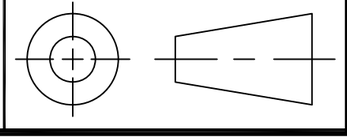

PLANTRONICS RESTRICTED
This document contains Plantronics, Inc. proprietary data, and is not to be copied, reproduced, used or divulged to unauthorized persons, in whole or in part, without proper authorization in writing from Plantronics. This information is the property of Plantronics, Inc. which reserves all rights to it.

UNLESS OTHERWISE SPECIFIED DIMENSIONS ARE IN: INCHES
AND TOLERANCES ARE:
DECIMAL
.XX = ± .01
.XXX = ± .005
ANGLE = ± 2° FRACTION = ± 1/16

MATERIAL:

FINISH:

DO NOT SCALE

DRAWN BY	J. BAKER	5/19/99
CHECKED BY	M. ERBE	5/19/99
DEV ENG APPD	JAN SHADLE	5/20/99
MFG APPD		
PROD ENG APPD		

PLANTRONICS SOUND INNOVATION

TITLE
MODEL
SDS 1031-07

SIZE	CAT CODE	DWG NO.	REV.
B	01	91031-07	F

SCALE 1=3 SHEET 1 OF 1

Special Products Packed-Level Bill of Materials

Model Number: SDS 1031-07
Part Number: 91031-07
Revision: F
Date: 25-Apr-07
Receiver Configuration: Dual-channel
Connector: PJ-7
Capsule Type: Supra Dynamic
Configuration: Switchcase

View Drawing (only available when viewing BOM online in Word format)

ITEM	QTY	PLANTRONICS PART NUMBER	DESCRIPTION
1.	1	100558-01	HEADSET ASSEMBLY
2.	2	25073-01	EAR CUSHION
3.	1	17876-02	HEADBAND TENSIONER KIT
4.	1	26938-01	HEADBAND ASSEMBLY
5.	2	19954-03	LABEL, CAPSULE
6.	1	24000-01	WINDSCREEN
7.	1	25478-01	LABEL, MODEL NO. & DATE CODE
8.	1	25652-01	BOX, PACKING
9.	1	25729-02	KIT, SUPRA NO. 2
10.	1	25686-02	SLEEVE, FOAM
11.	1	40637-01	POUCH
12.	REF	40460-00	PERFORMANCE SPECIFICATION

DWG NO. B-91031-08

REVISION					
REV	DESCRIPTION	DATE	BY	CHK'D BY	ENGR APP'D
D	CHANGE TO NEW LOGO. DELETE W1.	23-APR-07	JB	RC	

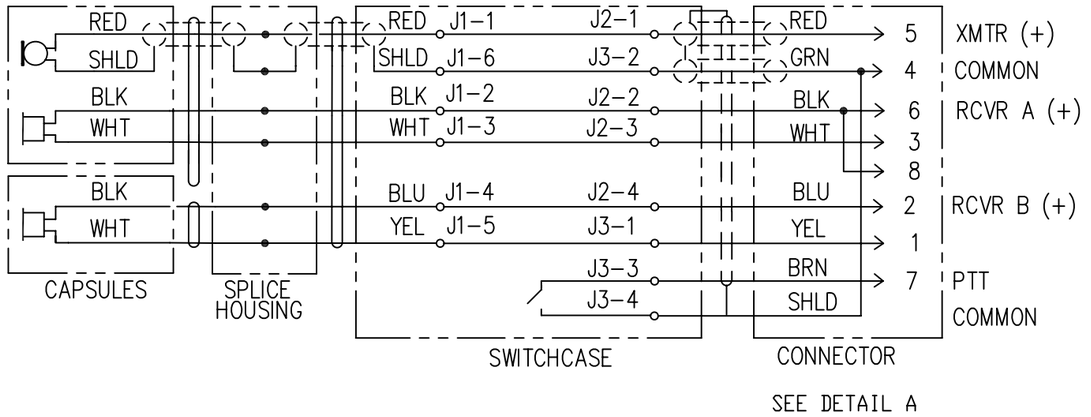

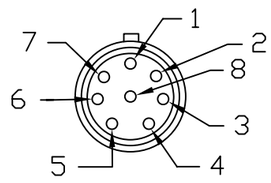

DETAIL A
SCALE: 2=1

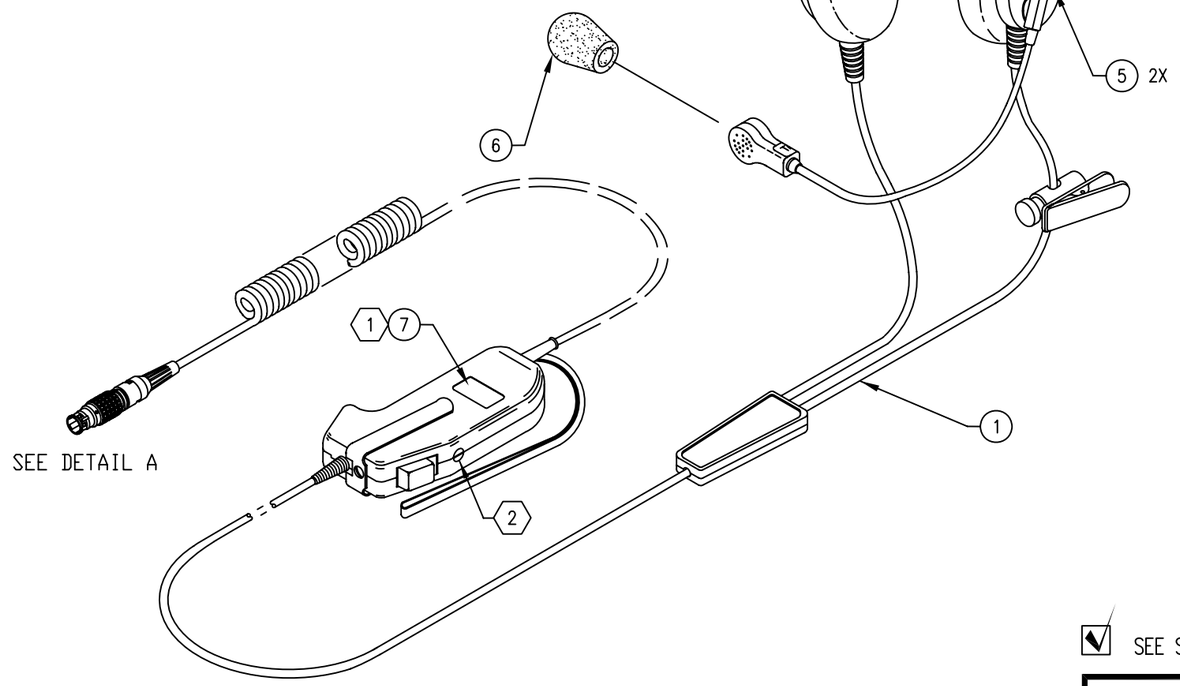

REFERENCE SPECIFICATIONS
- AT 1 kHz -

TRANSMITTER	
MICROPHONE TYPE	DYNAMIC.
POLAR PATTERN	CARDIOID.
OUTPUT AMPLITUDE	-74 ± 4 dBV (126 TO 316 uV RMS) OPEN-CIRCUIT WITH AN INPUT SIGNAL OF 88 dB SPL APPLIED TO THE FRONT SURFACE OF THE MICROPHONE HOUSING WHICH IS HELD ON-AXIS AT ONE INCH FROM THE MOUTH OPENING OF AN ARTIFICIAL MOUTH.
OUTPUT IMPEDANCE	150 OHMS, NOMINAL.
RECEIVERS	
CONFIGURATION	DUAL-CHANNEL.
OUTPUT AMPLITUDE	84 ± 4 dB SPL INTO AN IEC COUPLER FOR SUPRA-AURAL EARPHONES PER ANSI STD S 3.7-1973 WITH A FORCE OF 36 OUNCES AND AN OPEN-CIRCUIT INPUT OF 40 mV THROUGH 600 OHMS.
INPUT IMPEDANCE	200 OHMS, NOMINAL, EACH RECEIVER.
PUSH-TO-TALK SWITCH	MOMENTARY OR LOCKING, SELECTABLE.
CABLES	
CAPSULE	39 INCHES.
CONNECTOR	15 FT (EXTENDED) COIL.
CONNECTOR	JUPITER PN JBXFD1G08MSSDSM WITH BOOT PN GMA.1B.054.DN, OR LEMO PN FGG.1B.308.CLAD.62Z WITH BOOT PN GMA.1B.054.DN.
COLOR	BLACK.
WARRANTY	ONE YEAR.

☑ SEE SEPARATE BILL OF MATERIALS

PLANTRONICS RESTRICTED

This document contains Plantronics, Inc. proprietary data, and is not to be copied, reproduced, used or divulged to unauthorized persons, in whole or in part, without proper authorization in writing from Plantronics. This information is the property of Plantronics, Inc. which reserves all rights to it.

(2) SET THE SELECTOR TO THE LOCKING POSITION.

(1) IMPRINT THE MODEL NUMBER AND DATE CODE ON THE SWITCHCASE HOUSING PER DWG 13629.

NOTES: (UNLESS OTHERWISE SPECIFIED) REF 40459, 40460

THIRD ANGLE PROJECTION

UNLESS OTHERWISE SPECIFIED DIMENSIONS ARE IN: INCHES
AND TOLERANCES ARE:
DECIMAL
.XX = ± .01
.XXX = ± .005
ANGLE = ± 2° FRACTION = ± 1/16

MATERIAL:

FINISH:

DO NOT SCALE

DRAWN BY	J. BAKER	08/03/00
CHECKED BY	M. ERBE	08/03/03
DEV ENG APPD	RMS	08/23/00
MFG APPD		
PROD ENG APPD		

PLANTRONICS SOUND INNOVATION

TITLE
MODEL
SDS 1031-08

SIZE	CAT CODE	DWG NO.	REV.
B	01	91031-08	D

SCALE 1=3 SHEET 1 OF 1

Special Products Packed-Level Bill of Materials

Model Number: SDS 1031-08
Part Number: 91031-08
Revision: D
Date: 23-Apr-07
Receiver Configuration: Dual-channel
Connector: Lemo FGG.1B.308.CLAD.62Z with Boot GMA.1B.054.DN
Capsule Type: Supra Dynamic
Configuration: Switchcase
Description: This is a Supra Dynamic, Dual-channel, PTT headset with a Lemo connector, for Schmid.

View Drawing (only available when viewing BOM online in Word format)

ITEM	QTY	PLANTRONICS PART NUMBER	DESCRIPTION
1.	1	100895-01	HEADSET ASSEMBLY
2.	2	25073-01	EAR CUSHION
3.	1	17876-02	HEADBAND TENSIONER KIT
4.	1	26938-01	HEADBAND ASSEMBLY
5.	2	19954-03	LABEL, CAPSULE
6.	1	24000-01	WINDSCREEN
7.	1	25478-01	LABEL, MODEL NO. & DATE CODE
8.	1	25652-01	BOX, PACKING
9.	1	25729-02	KIT, SUPRA NO. 2
10.	1	25686-02	SLEEVE, FOAM
11.	1	40637-01	POUCH
12.	REF	40460-00	PERFORMANCE SPECIFICATION

DWG NO. B-91031-09

REVISION					
REV	DESCRIPTION	DATE	BY	CHK'D BY	ENGR APP'D
E	CHANGE TO NEW LOGO. DELETE W1.	20-APR-07	JB	RC	

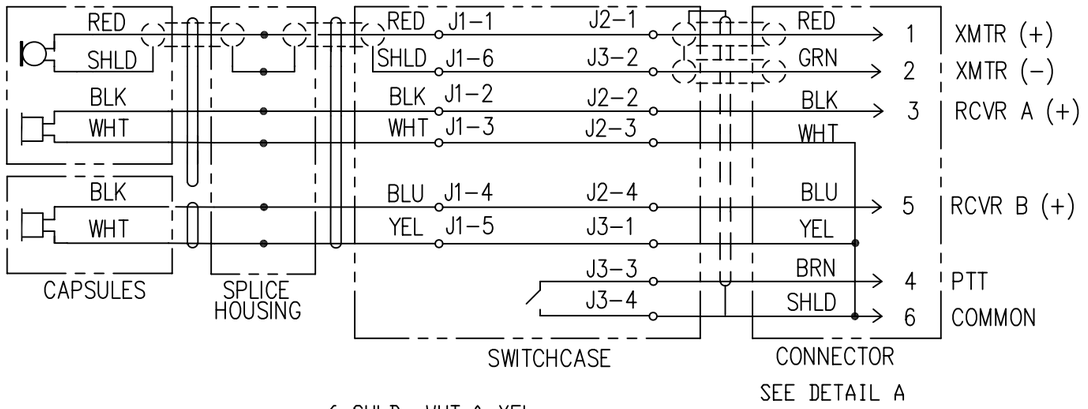

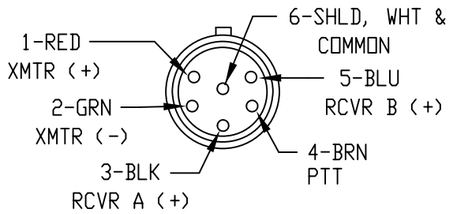

MATING SIDE

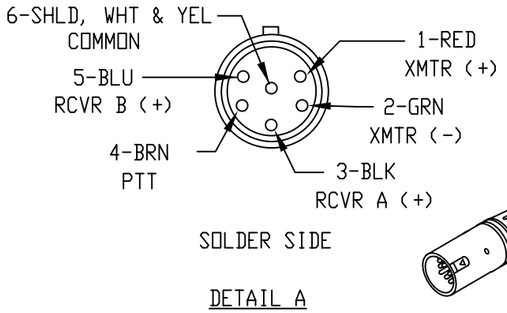

SOLDER SIDE

DETAIL A

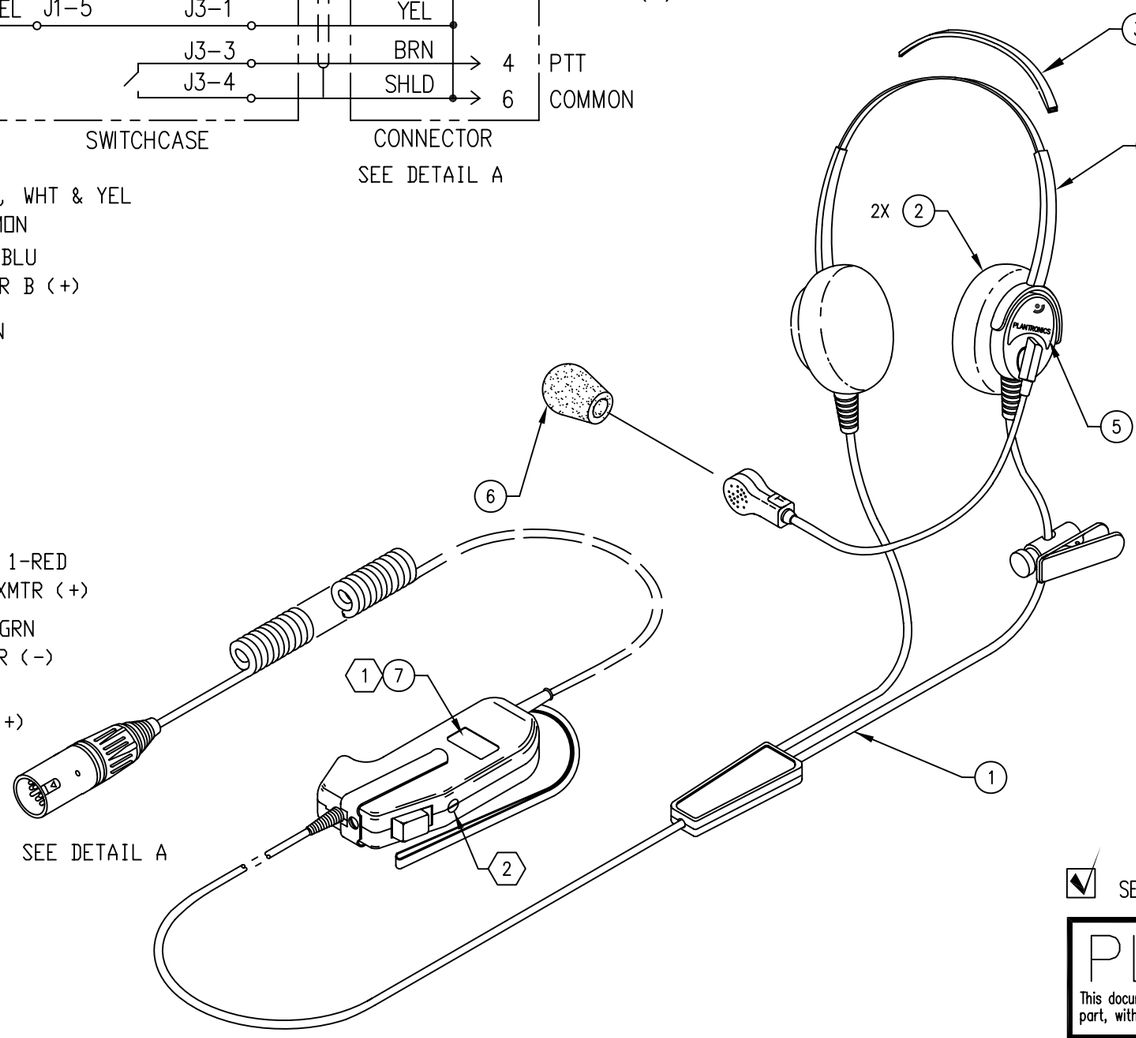

REFERENCE SPECIFICATIONS
- AT 1 kHz -

TRANSMITTER	
MICROPHONE TYPE	DYNAMIC.
POLAR PATTERN	CARDIOID.
OUTPUT AMPLITUDE	-74 ± 4 dBV (126 TO 316 uV RMS) OPEN-CIRCUIT WITH AN INPUT SIGNAL OF 88 dB SPL APPLIED TO THE FRONT SURFACE OF THE MICROPHONE HOUSING WHICH IS HELD ON-AXIS AT ONE INCH FROM THE MOUTH OPENING OF AN ARTIFICIAL MOUTH.
OUTPUT IMPEDANCE	150 OHMS, NOMINAL.
RECEIVERS	
CONFIGURATION	DUAL-CHANNEL.
OUTPUT AMPLITUDE	84 ± 4 dB SPL INTO AN IEC COUPLER FOR SUPRA-AURAL EARPHONES PER ANSI STD S 3.7-1973 WITH A FORCE OF 36 OUNCES AND AN OPEN-CIRCUIT INPUT OF 40 mV THROUGH 600 OHMS.
INPUT IMPEDANCE	200 OHMS, NOMINAL, EACH RECEIVER.
PUSH-TO-TALK SWITCH	MOMENTARY OR LOCKING, SELECTABLE.
CABLES	
CAPSULE	39 INCHES.
CONNECTOR	15 FT (EXTENDED) COIL.
CONNECTOR	NEUTRIK NC6MX OR EQUIVALENT.
COLOR	BLACK.
WARRANTY	ONE YEAR.

☑ SEE SEPARATE BILL OF MATERIALS

(2) SET THE SELECTOR TO THE LOCKING POSITION.

(1) IMPRINT THE MODEL NUMBER AND DATE CODE ON THE LABEL (ITEM 7) AND INSTALL ON SWITCHCASE HOUSING, PER DWG 13629.

NOTES: (UNLESS OTHERWISE SPECIFIED) REF 40459, 40460

THIRD ANGLE PROJECTION

PLANTRONICS RESTRICTED

This document contains Plantronics, Inc. proprietary data, and is not to be copied, reproduced, used or divulged to unauthorized persons, in whole or in part, without proper authorization in writing from Plantronics. This information is the property of Plantronics, Inc. which reserves all rights to it.

UNLESS OTHERWISE SPECIFIED DIMENSIONS ARE IN: INCHES
AND TOLERANCES ARE:
DECIMAL
.XX = ± .01
.XXX = ± .005
ANGLE = ± 2° FRACTION = ± 1/16

MATERIAL:

FINISH:

DO NOT SCALE

DRAWN BY	J. BAKER	10/08/01
CHECKED BY	M. ERBE	10/08/01
DEV ENG APPD	RMS	10/15/01
MFG APPD		
PROD ENG APPD		

PLANTRONICS SOUND INNOVATION

TITLE
MODEL
SDS 1031-09

SIZE	CAT CODE	DWG NO.	REV.
B	01	91031-09	E

SCALE 1=3 SHEET 1 OF 1

Special Products Packed-Level Bill of Materials

Model Number: SDS 1031-09
Part Number: 91031-09
Revision: E
Date: 20-Apr-07
Receiver Configuration: Dual-channel
Connector: Neutrik NC6MX
Capsule Type: Supra Dynamic
Configuration: Switchcase

View Drawing (only available when viewing BOM online in Word format)

ITEM	QTY	PLANTRONICS PART NUMBER	DESCRIPTION
1.	1	101133-01	HEADSET ASSEMBLY
2.	2	25073-01	EAR CUSHION
3.	1	17876-02	HEADBAND TENSIONER KIT
4.	1	26938-01	HEADBAND ASSEMBLY
5.	2	19954-03	LABEL, CAPSULE
6.	1	24000-01	WINDSCREEN
7.	1	25478-01	LABEL, MODEL NO. & DATE CODE
8.	1	25652-01	BOX, PACKING
9.	1	25729-02	KIT, SUPRA NO. 2
10.	1	25686-02	SLEEVE, FOAM
11.	1	40637-01	POUCH
12.	REF	40460-00	PERFORMANCE SPECIFICATION

DWG NO. B-91031-10

REVISION					
REV	DESCRIPTION	DATE	BY	CHK'D BY	ENGR APP'D
C	CHG TO NEW LOGO. DELETE W1.	20-APR-07	JB	RC	

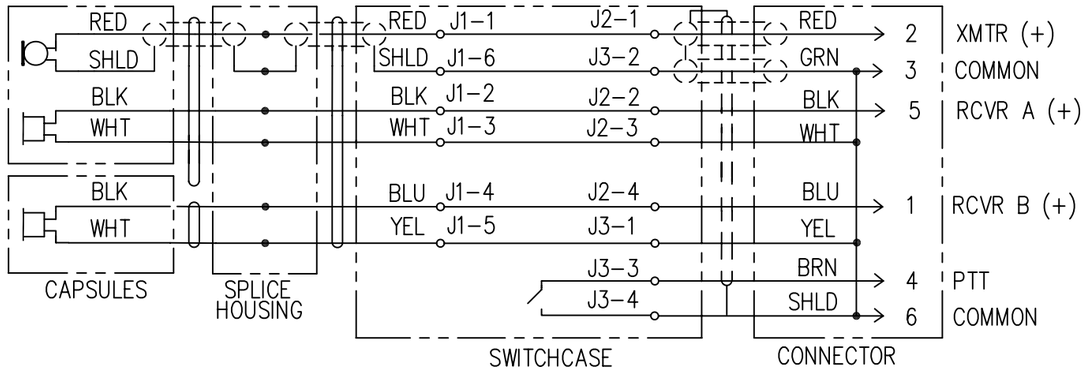

SEE DETAIL A

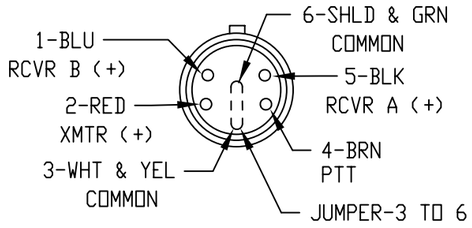

MATING SIDE

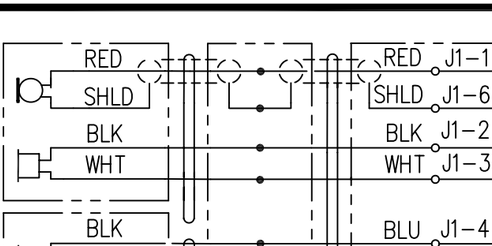

SOLDER SIDE

DETAIL A

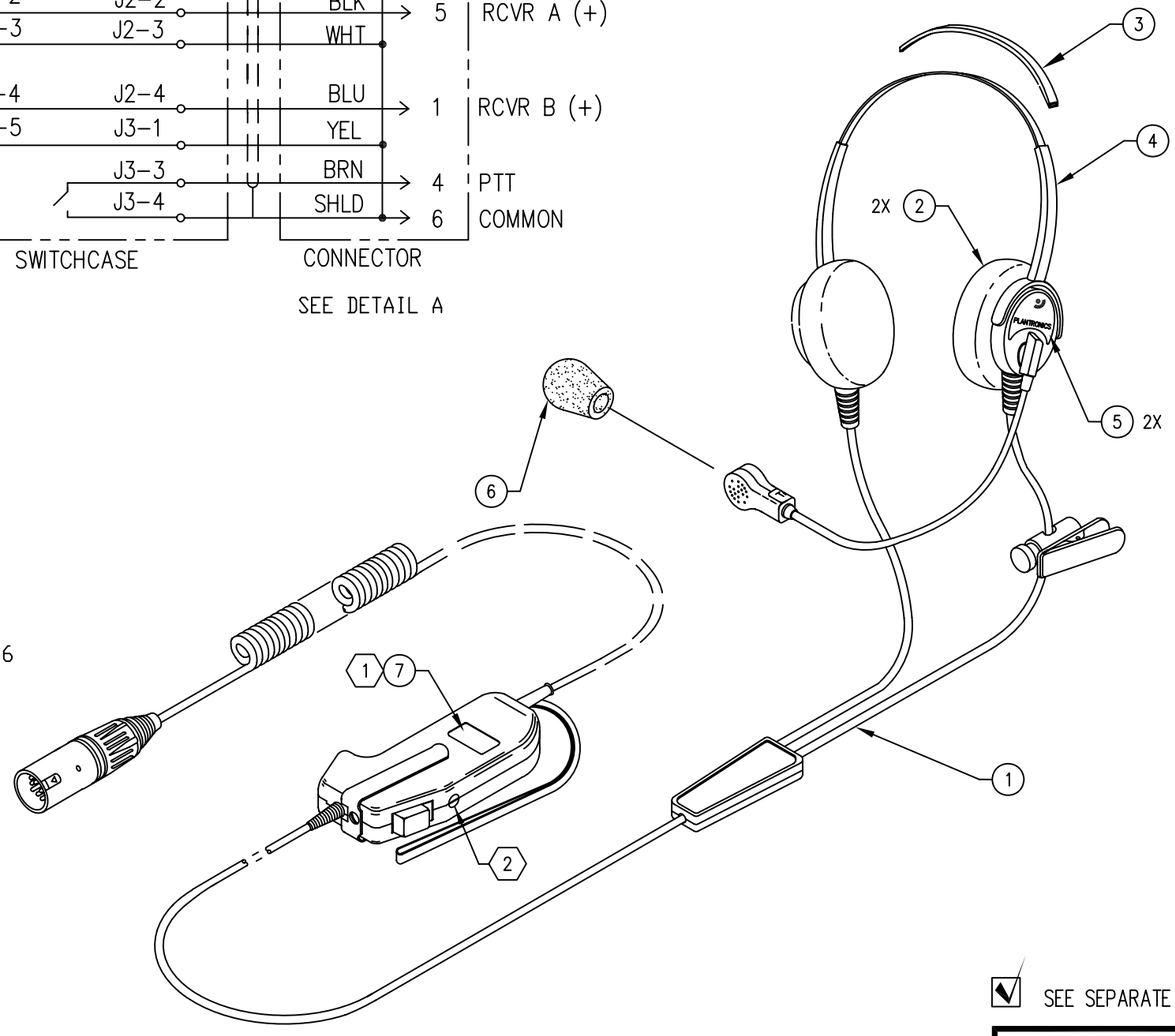

REFERENCE SPECIFICATIONS

- AT 1 kHz -

TRANSMITTER	
MICROPHONE TYPE	DYNAMIC.
POLAR PATTERN	CARDIOID.
OUTPUT AMPLITUDE	-74 ± 4 dBV (126 TO 316 uV RMS) OPEN-CIRCUIT WITH AN INPUT SIGNAL OF 88 dB SPL APPLIED TO THE FRONT SURFACE OF THE MICROPHONE HOUSING WHICH IS HELD ON-AXIS AT ONE INCH FROM THE MOUTH OPENING OF AN ARTIFICIAL MOUTH.
OUTPUT IMPEDANCE	150 OHMS, NOMINAL.
RECEIVERS	
CONFIGURATION	DUAL-CHANNEL.
OUTPUT AMPLITUDE	84 ± 4 dB SPL INTO AN IEC COUPLER FOR SUPRA-AURAL EARPHONES PER ANSI STD S 3.7-1973 WITH A FORCE OF 36 OUNCES AND AN OPEN-CIRCUIT INPUT OF 40 mV THROUGH 600 OHMS.
INPUT IMPEDANCE	200 OHMS, NOMINAL, EACH RECEIVER.
PUSH-TO-TALK SWITCH	MOMENTARY OR LOCKING, SELECTABLE.
CABLES	
CAPSULE	39 INCHES.
CONNECTOR	15 FT (EXTENDED) COIL.
CONNECTOR	NEUTRIK NC6MX OR EQUIVALENT.
COLOR	BLACK.
WARRANTY	ONE YEAR.

☑ SEE SEPARATE BILL OF MATERIALS

(2) SET THE SELECTOR TO THE LOCKING POSITION.

(1) IMPRINT THE MODEL NUMBER AND DATE CODE ON THE LABEL (ITEM 7) AND INSTALL ON SWITCHCASE HOUSING, PER DWG 13629.

NOTES: (UNLESS OTHERWISE SPECIFIED) REF 40459, 40460

THIRD ANGLE PROJECTION

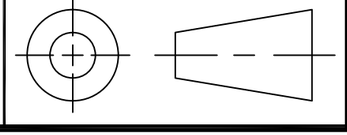

PLANTRONICS RESTRICTED

This document contains Plantronics, Inc. proprietary data, and is not to be copied, reproduced, used or divulged to unauthorized persons, in whole or in part, without proper authorization in writing from Plantronics. This information is the property of Plantronics, Inc. which reserves all rights to it.

UNLESS OTHERWISE SPECIFIED DIMENSIONS ARE IN: INCHES
AND TOLERANCES ARE:
DECIMAL
.XX = ± .01
.XXX = ± .005
ANGLE = ± 2° FRACTION = ± 1/16

MATERIAL:

FINISH:

DO NOT SCALE

DRAWN BY	J. BAKER	05/28/03
CHECKED BY	M. ERBE	05/28/03
DEV ENG APPD	JAN SHADLE	09/26/03
MFG APPD		
PROD ENG APPD		

PLANTRONICS
SOUND INNOVATION

TITLE
MODEL
SDS 1031-10

SIZE	CAT CODE	DWG NO.	REV.
B	01	91031-10	C

SCALE 1=3 SHEET 1 OF 1

Special Products Packed-Level Bill of Materials

Model Number: SDS 1031-10
Part Number: 91031-10
Revision: C
Date: 20-Apr-07
Receiver Configuration: Dual-channel
Connector: Neutrik NC6MX
Capsule Type: Supra Dynamic
Configuration: Switchcase
Description: This is a Supra Dynamic, Dual-channel, PTT with an NC6MX connector.

View Drawing (only available when viewing BOM online in Word format)

ITEM	QTY -10	PLANTRONICS PART NUMBER	DESCRIPTION
1.	1	101444-01	HEADSET ASSEMBLY
2.	2	25073-01	EAR CUSHION
3.	1	17876-02	HEADBAND TENSIONER KIT
4.	1	26938-01	HEADBAND ASSEMBLY
5.	2	19954-03	LABEL, CAPSULE
6.	1	24000-01	WINDSCREEN
7.	1	25478-01	LABEL, MODEL NO. & DATE CODE
8.	1	25652-01	BOX, PACKING
9.	1	25729-02	KIT, SUPRA NO. 2
10.	1	25686-02	SLEEVE, FOAM
11.	1	40637-01	POUCH
12.	REF	40460-00	PERFORMANCE SPECIFICATION